9000XE basin mixer

9000XE basin mixer is a basin mixer in chrome. Its classic design and water-saving function make it a natural choice for the bathroom. The product comes with a captive waste.

Article number: 86530010 **RSK:** 8278972 **Flow 3 bar:** 4.5 l/m
Description: Chrome

- With captive waste, lower part in plastic
- Cold Start
- Ceramic cartridge with soft closing function
- Adjustable flow control and temperature limiter
- Eco Flow (energy and water saving aerator)
- Soft PEX® hoses with 3/8" connecting nut (stainless steel braided)
- Lead Free material
- Hole diameter Ø34-37 mm

Uniqe characteristics

Energy class

Accepted

EPD (Environmental Product Declaration)
INTERNATIONAL EPD SYSTEM
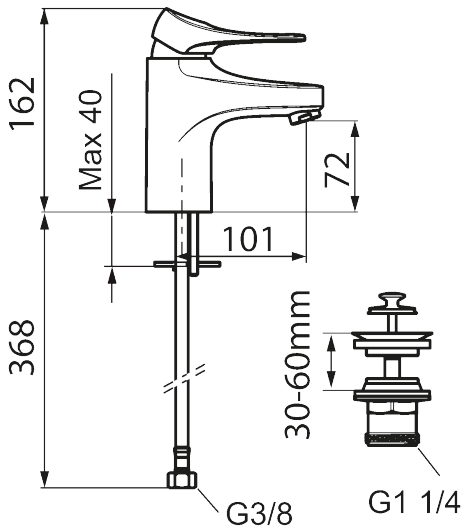
Backflow protection unit type AA