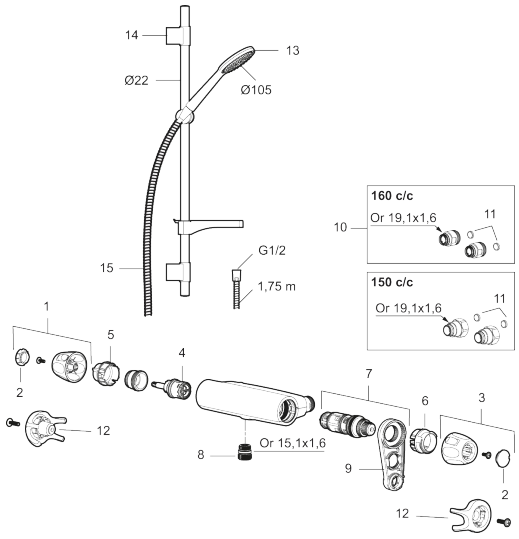

9000XE shower kit. Produced from 2023.

Article number: 8682xxxx-variant

Uniqe characteristics