9000XE shower mixer

9000XE shower mixer in brushed chrome is the successor to one of our best-selling shower mixers. Its design is as sophisticated as that of its predecessor, but it has been upgraded with double check valves, faster temperature regulation, lower weight and noise absorbing functions. This product comes with a mounting bracket 40-160 c/c and can be supplemented with a tub spout.

Article number: 86840003 **RSK:** 8351561 **Flow 3 bar:** 12.2 l/m
Description: Brushed chrome, with reversible wall plate 40–160 c/c

- With shower connection down
- Pressure balanced thermostatic mixer
- With ceramic sealed headwork
- Temperature handle with safety stop at 38°C
- With Eco-function
- With reversible wall plate 40–160 c/c
- Pipe connection up or down
- Lead Free material
- Approved non-return valves, EN-Standard EN1717

Uniqe characteristics

Accepted

Backflow protection unit type EB

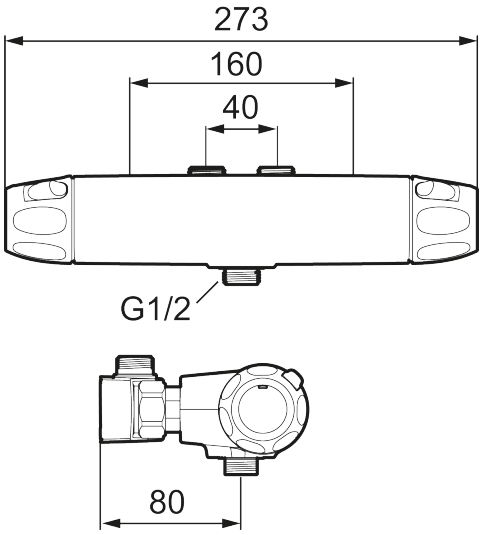

PRODUCT DESCRIPTION

9000XE shower mixer

9000XE shower mixer in brushed chrome is the successor to one of our best-selling shower mixers. Its design is as sophisticated as that of its predecessor, but it has been upgraded with double check valves, faster temperature regulation, lower weight and noise absorbing functions. This product comes with a mounting bracket 40-160 c/c and can be supplemented with a tub spout.

Article number: 86840003 **RSK:** 8351561

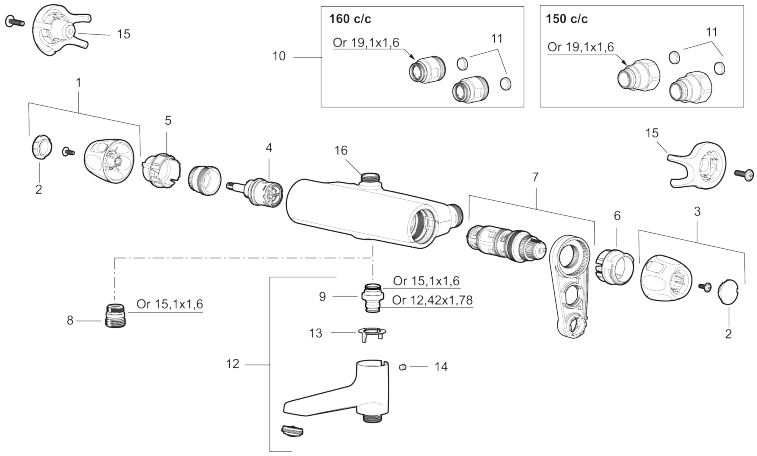

Sparepartlist

NO.	FMM NO.	RSK	DESCRIPTION
1	S600083	8218917	On/off handle, complete, krom
1	S600083.75	8218919	On/off handle, complete, brushed chrome
2	S600116	8218920	End cover, chrome
2	S600116.75	8218922	End cover, brushed chrome
3	S600082	8218914	Temperature handle, complete, chrome
3	S600082.75	8218916	Temperature handle, complete, brushed chrome
4	S600020	8441462	Reversible headwork shower mixer 12 l/min, with service tool
4	S600269	8387232	Reversible headwork shower mixer 12 l/min
4	S600021	8441463	Reversible headwork 22 l/min, with service tool
4	S600270	8387233	Reversible headwork 22 l/min
5	S600086	8439710	Stop ring, for one outlet (down or up)
6	S600087	8439711	Scalding protection ring, max 50°C
6	S600026	8439708	Scalding protection ring, max 42°C
6	S600365	8397058	Scalding protection ring, max 38 °C, black
7	S600084	8439709	Thermostatic cartridge, complete, incl. service tool
7	S600271	8397030	Thermostatic cartridge, complete, without service tool

NO.	FMM NO.	RSK	DESCRIPTION
8	S600088	8439712	Nipple M18x1–G1/2 for shower mixer
9	39754000	8591969	Nipple M18x1 with o-ring for bath mixer
10	59800800	8592005	Inlet connectors, 160 c/c
11	38632006	8590311	Filter
12	S600077	8241000	Swivel spout with integrated diverter, chrome
12	S600077.75	8357750	Swivel spout with integrated diverter, brushed chrome
13	38521000	8295345	Stop ring
14	38086000	8439701	Locking screw
15	S600105	8439713	Care-handle, black, 2 pcs
16	39710800	8591967	Nipple M18x1-G1/2 for shower mixer