9000E flexi kitchen mixer

An optimal fusion of design and function. The FM Mattsson 9000E range ushers in a new generation of mixers that are environmentally engineered down to the last detail. The mixer brings beauty and technical perfection to your kitchen. Even in its basic version, the mixer has unique functions that save energy without compromising on comfort.

Article number: 81010000 **RSK:** 8308941 **Flow 3 bar:** 10.2 l/m

Description: Chrome, connection flat end Ø10 mm

- Cold Start
- Ceramic cartridge with soft closing function
- Adjustable flow control and temperature limiter
- Hose, limitation part for 60°, 85°, 110° or 360° included
- Nozzle with concentrated jet and handshower
- With dish washer valve, switchable between cold and hot water. Pre-set on cold water
- Soft PEX® hoses (stainless steel braided)
- Approved non-return valves, EN-Standard EN1717
- Hole diameter Ø34-37 mm

Uniqe characteristics

Backflow protection unit type EB

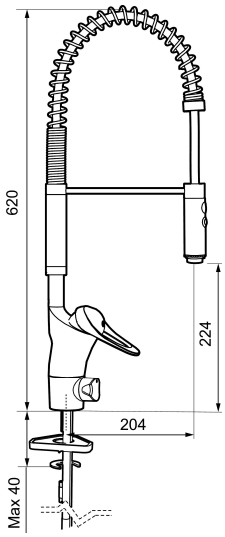

PRODUCT DESCRIPTION

9000E flexi kitchen mixer

An optimal fusion of design and function. The FM Mattsson 9000E range ushers in a new generation of mixers that are environmentally engineered down to the last detail. The mixer brings beauty and technical perfection to your kitchen. Even in its basic version, the mixer has unique functions that save energy without compromising on comfort.

Article number: 81010000 **RSK:** 8308941

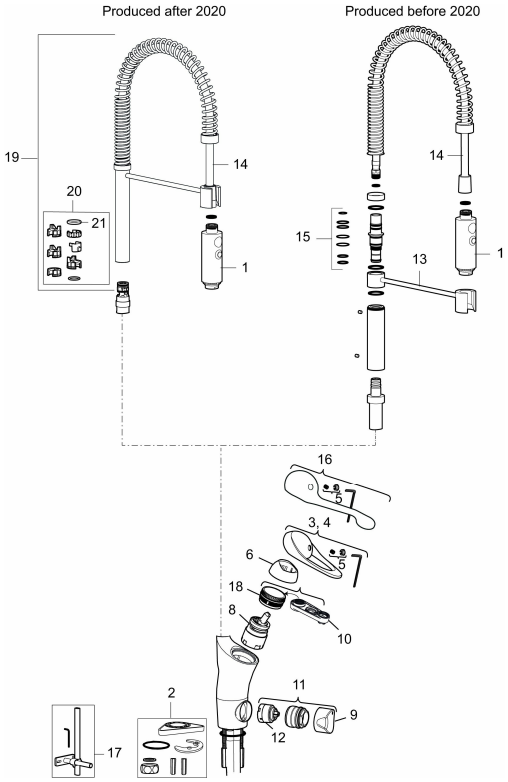

Sparepartlist

NO.	FMM NO.	RSK	DESCRIPTION
1	29190000	8592013	Nozzle for Flexi
2	S600159	8387097	Fastening kit, for kitchen mixer
3	58500000	8591936	Lever, complete, L=90 mm
4	58501750	8591937	Lever, complete, L=150 mm
5	58510000	8591944	Cover lid with colour marking
6	58520000	8591945	Cover sleeve
7	58530140	8241726	Fastening nipple with service tool
8	S600273	8387230	Ceramic cartridge with service tool, cold start (green ring)
8	59115500	8591947	Ceramic cartridge with service tool, standard (red ring)
8	59126000	8591966	Ceramic cartridge with service tool, Eco Plus (green ring)
9	59280000	8591938	Knob for dishwasher

NO.	FMM NO.	RSK	DESCRIPTION
10	S600298	3870203	Service tool
11	59290000	8591939	On/off valve for dishwasher, complete
12	S600337	8346905	Ceramic cartridge for dishwasher, with service tool
12	S600316	8387265	Ceramic cartridge for dishwasher, without service tool
13	27580000	8594559	Nozzle arm and screw
14	38801007	8592014	Hose for Flexi
15	37800100	8594556	O-ring kit
16	58501800	8592048	Lever, complete, L=180 mm
17	S600308	8387263	Stabilizer kit
18	29390000	8295356	Fastening nipple
19	S600056		Spout, complete
20	58641000	8594560	Lock kit for swivel spout
21	37801550	8295350	O-ring 15,54 x 2,62, 2 pcs