SILJAN head shower kit

Our FM Mattsson Siljan collection combines design with eco-friendly and energy-saving functions without compromising on comfort. The Siljan shower range includes a wide selection of overhead shower and hand shower sets.
The showers can be combined with a Siljan thermostatic shower or bath mixer. Or make things simple by choosing one of our smart all-in-one overhead or hand shower sets.

Article number: 83832500 **RSK:** 8283730 **Flow 3 bar:** 7.9 l/m
Description: Chrome, 150 c/c

- Pressure balanced thermostatic mixer with shower set
- With reversible headwork
- Eco Flow
- Temperature handle with safety stop at 38°C
- With Eco-function
- Approved non-return valves, EN-Standard EN1717
- Anti lime-scale head- and hand shower with 3 shower jet settings
- Shower bar with slider and wall bracket with sealing
- Shower pipe can be shortened if required
- Wall bracket freely adjustable in height, 700–1000 from connection and 50–110 mm from wall, 2x20 mm spacers included, with sealing, hidden pipe joint

Uniqe characteristics

B Energy class

Assessed
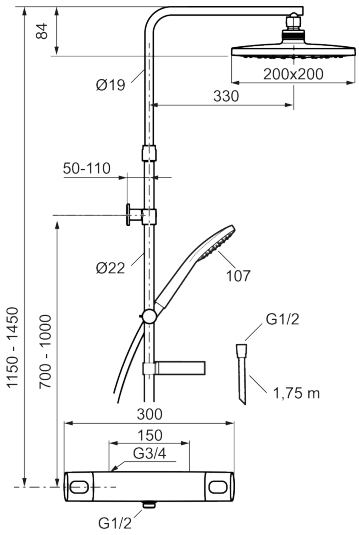
Backflow protection unit type EB