9000XE head shower kit

9000XE head shower kit is a head shower kit in chrome.
The telescopic shower bar allows the wall bracket's height to be adapted to the specific bathroom's ceiling height, as well as to the user's height and/or the preferred distance to the shower head.
This product is LEED certified, which means it meets the flow rate requirements applicable to certain new buildings and conversions.

Article number: 86833100 **RSK:** 8283682 **Flow 3 bar:** 6.0 l/m
Description: Chrome, 160 c/c, LEED/BREEAM compliant

- Note! 160 c/c
- Safety mixer 9000XE and head shower set 9000XE
- With reversible headwork
- Anti lime-scale head- and hand shower
- Shower bar with slider and wall bracket with sealing
- Shower pipe can be shortened if required
- Wall bracket freely adjustable in height, 700–970 from connection and 50–100 mm from wall, 2x20 mm spacers included, with sealing, hidden pipe joint
- Lead Free material

Uniqe characteristics
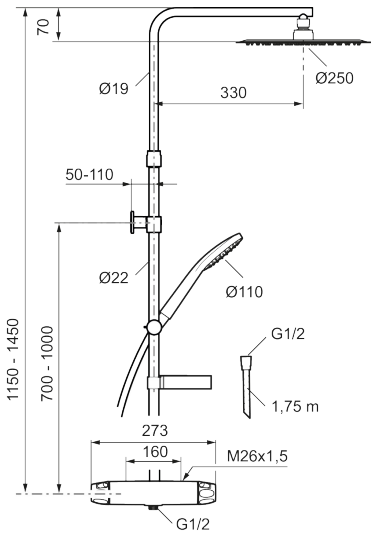
Accepted