9000E kitchen/basin mixer

An optimal fusion of design and function. The FM Mattsson 9000E range ushers in a new generation of mixers that are environmentally engineered down to the last detail. The mixer brings beauty and technical perfection to your kitchen. Even in its basic version, the mixer has unique functions that save energy without compromising on comfort.

Article number: 81341250 **RSK:** 8309003 **Flow 3 bar:** 8.2 l/m
Description: Chrome

- Cold Start
- Ceramic cartridge with soft closing function
- Adjustable flow control and temperature limiter
- Spout included

Uniqe characteristics

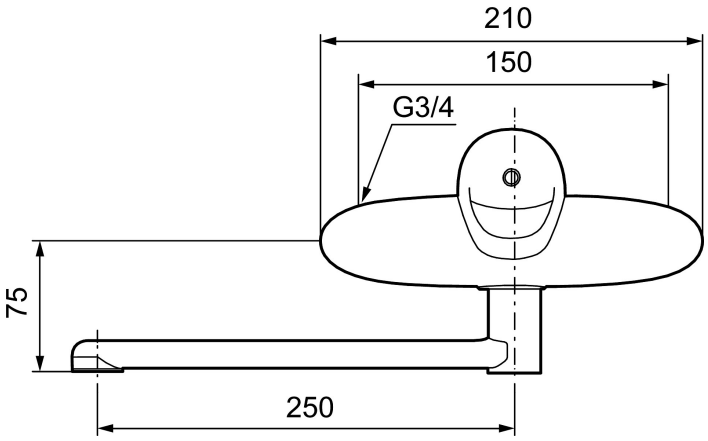

PRODUCT DESCRIPTION

9000E kitchen/basin mixer

An optimal fusion of design and function. The FM Mattsson 9000E range ushers in a new generation of mixers that are environmentally engineered down to the last detail. The mixer brings beauty and technical perfection to your kitchen. Even in its basic version, the mixer has unique functions that save energy without compromising on comfort.

Article number: 81341250 **RSK:** 8309003

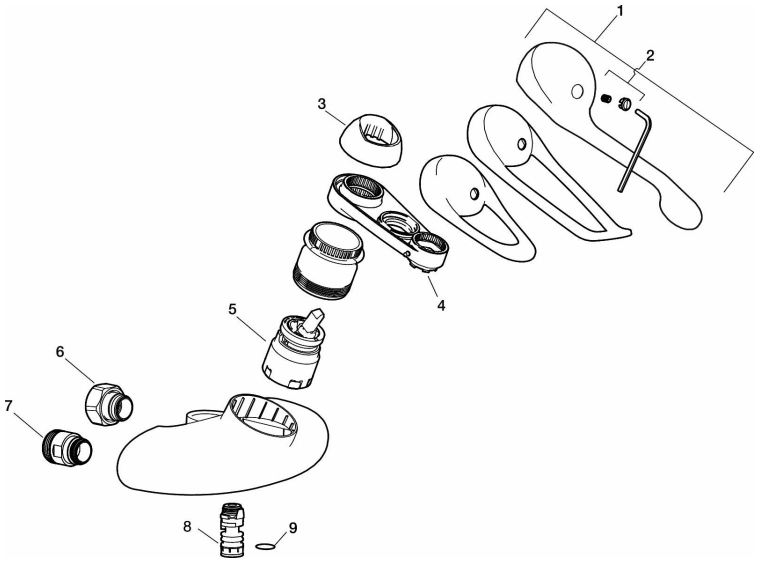

Sparepartlist

NO.	FMM NO.	RSK	DESCRIPTION
	44450009	8295353	Accessories (limitation segment, stop screw, allen wrench 3 mm)
1	58500000	8591936	Lever, complete, L=90 mm
1	58501750	8591937	Lever, complete, L=150 mm
1	58501800	8592048	Lever, complete, L=180 mm
2	58510000	8591944	Cover lid with colour marking
3	58520000	8591945	Cover sleeve
4	S600298	3870203	Service tool
5	S600273	8387230	Ceramic cartridge with service tool, cold start (green ring)
5	59126000	8591966	Ceramic cartridge with service tool, Eco Plus (green ring)
6	59811800	8592011	Inlet connectors 150 c/c (left-handed thread)
7	59800800	8592005	Inlet connectors, 160 c/c
8	29888000	8243166	Nipple M18x1
9	37801550	8295350	O-ring 15,54 x 2,62, 2 pcs