SILJAN shower set

Our new FM Mattsson Siljan collection combines design with eco-friendly and energy-saving functions without compromising on comfort. The Siljan shower range includes a wide selection of overhead shower and hand shower sets. The showers can be combined with a Siljan thermostatic shower or bath mixer. Or make things simple by choosing one of our smart all-in-one overhead or hand shower sets.

Article number: 83703900 **RSK:** 8197653 **Flow 3 bar:** 7.5 l/m
Description: Chrome, Replaced by 83700000

- Constant flow 7,5 l/min at 200–600 kPa
- Anti lime-scale hand shower with 3 shower jet settings
- With soap dish
- Shower bar with slider and flexible upper wall brackets with sealing
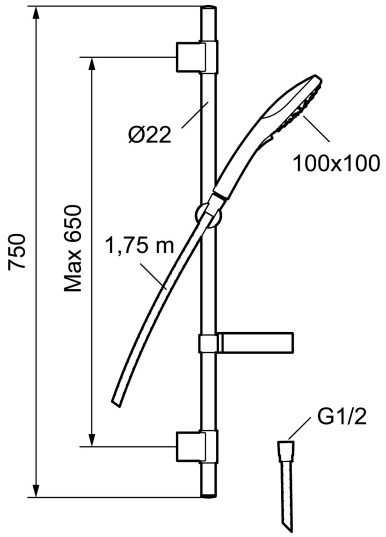
Uniqe characteristics