Transformer 12V

Article number: 16193000 **RSK:** 8553498

- For FMM 9000E Tronic, Tronic Compact, Tronic shower panel and Tronic wall-mounted mixers
- Enclosure class: IP45
- 12V DC
- 7W
- Operating temperature range: 0–40 °C
- Fixed installations requires a certified electrician
- Connects to AC adapter 1623-0000 and 1623-1000
- Length of cable: 0,5 m
- Maximum cable length 100m, >=0,5 mm^2
- Supplies up to 10 mixers
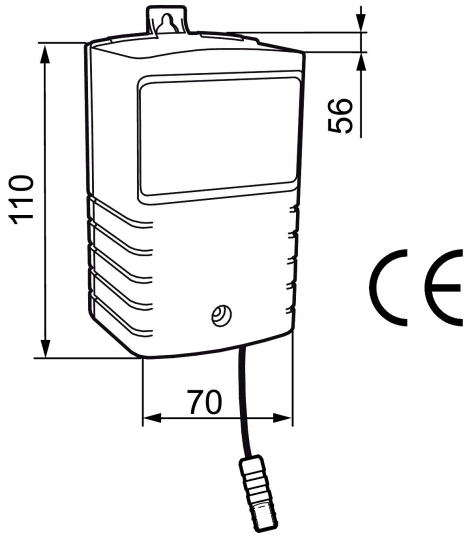
Uniqe characteristics