9000XE bath and head shower kit

9000XE bath and head shower kit is our complete set with a bath mixer and head shower kit in chrome. The mixer, together with the generously sized shower head, provides a pleasant shower experience with good pressure and coverage without wasting water. The shower package is easy to install in all types of bathrooms.

Article number: 86920000 **RSK:** 8283695 **Flow 3 bar:** 22.9 l/m
Description: Chrome, 160 c/c

- Note! 160 c/c
- Safety mixer 9000XE and head shower set 9000XE
- With reversible headwork
- Anti lime-scale head- and hand shower
- Shower bar with slider and wall bracket with sealing
- Shower pipe can be shortened if required
- Wall bracket freely adjustable in height, 700–970 from connection and 50–100 mm from wall, 2x20 mm spacers included, with sealing, hidden pipe joint
- Lead Free material

Uniqe characteristics

B Energy class
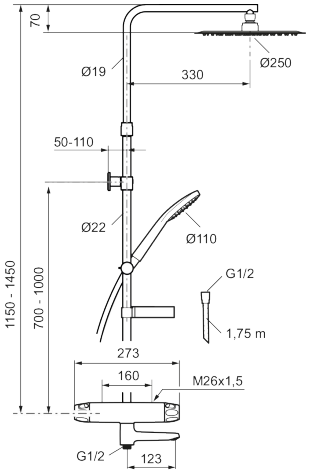
Accepted