MORA safe shower mixer

A new range of mixers for hospitals and customers that demands a legionella function. The legionella function is easily accessible without any disassembly. The mixers is delivered with a temperature stop ring with a safety stop at 38°C and a complete stop at 45°C. This means that it is easy to adjust the maximum temperature by adjusting the position of the stop ring.

Article number: 702345.SA **RSK:** 8344132
Description: Chrome, incl. s-connection (2x701001)

Uniqe characteristics

- With shower connection down
- Compensates temperature and pressure fluctuations
- Temperature handle with safety stop at 38°C, maximum temperature at 43°C
- Equipped with function for thermal disinfection against legionella
- Approved non-return valves, EN-Standard EN1717

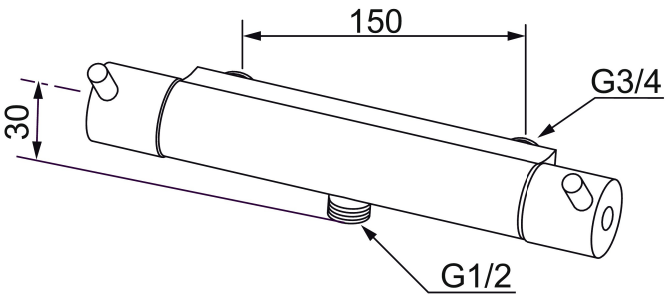

PRODUCT DESCRIPTION

MORA safe shower mixer

A new range of mixers for hospitals and customers that demands a legionella function. The legionella function is easily accessible without any disassembly. The mixers is delivered with a temperature stop ring with a safety stop at 38°C and a complete stop at 45°C. This means that it is easy to adjust the maximum temperature by adjusting the position of the stop ring.

Article number: 702345.SA **RSK:** 8344132

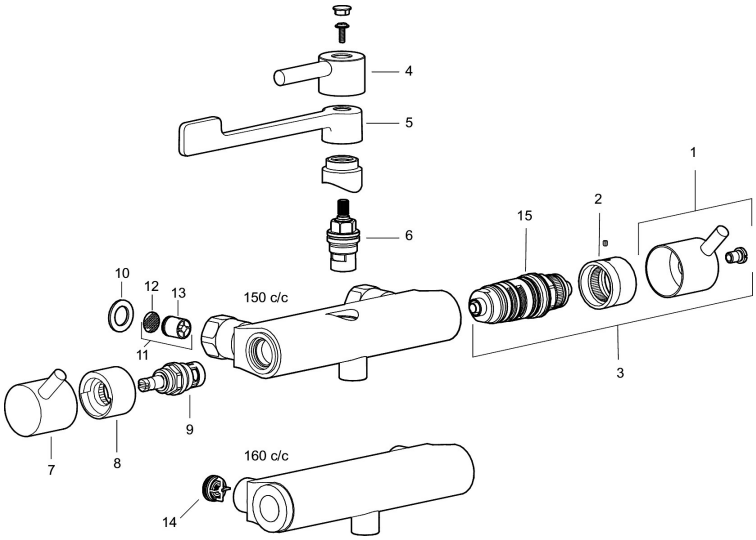

Sparepartlist

NO.	ART NO.	RSK	DESCRIPTION
1	409463.AE	8185714	Temperature handle, complete, chrome
1	S600225		Temperature handle 38°, complete, chrome
2	409464.AE	8345215	Stop ring
3	409465.AE	8185713	Kit (thermostatic cartridge, handle, stop ring)
4	409468.AE	8345213	Lever, L=58 mm
5	409469.AE	8345214	Lever, L=170 mm
6	409369.AE	8938270	Headwork
7	708450.AE	8439686	On/off handle, complete, chrome
8	708451.AE	8439689	Stop ring for on/off handle, RH
9	708467.AE	8345124	Headwork
10	709339.AE	8938274	Gasket 24/15x2, 2 pcs
11	708338.AE		Non-return valve (2 pcs)
12	708080.AE		Holder for filter, complete
13	139465.AE	8186872	Non-return valve, with lock ring
14	129380.AE	8345651	Non-return valve (2 pcs)

NO.	ART NO.	RSK	DESCRIPTION
15	38147000	8221811	Thermosatic cartridge, for thermal disinfection against legionella