SILJAN shower set

Our new FM Mattsson Siljan collection combines design with eco-friendly and energy-saving functions without compromising on comfort. The Siljan shower range includes a wide selection of overhead shower and hand shower sets. The showers can be combined with a Siljan thermostatic shower or bath mixer. Or make things simple by choosing one of our smart all-in-one overhead or hand shower sets.

Article number: 83703900 **RSK:** 8197653 **Flow 3 bar:** 7.5 l/m
Description: Chrome, Replaced by 83700000

- Constant flow 7,5 l/min at 200–600 kPa
- Anti lime-scale hand shower with 3 shower jet settings
- With soap dish
- Shower bar with slider and flexible upper wall brackets with sealing

Uniqe characteristics

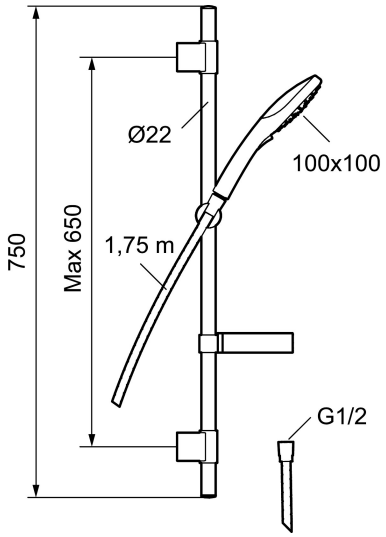

PRODUCT DESCRIPTION

SILJAN shower set

Our new FM Mattsson Siljan collection combines design with eco-friendly and energy-saving functions without compromising on comfort. The Siljan shower range includes a wide selection of overhead shower and hand shower sets.
The showers can be combined with a Siljan thermostatic shower or bath mixer. Or make things simple by choosing one of our smart all-in-one overhead or hand shower sets.

Article number: 83703900 **RSK:** 8197653

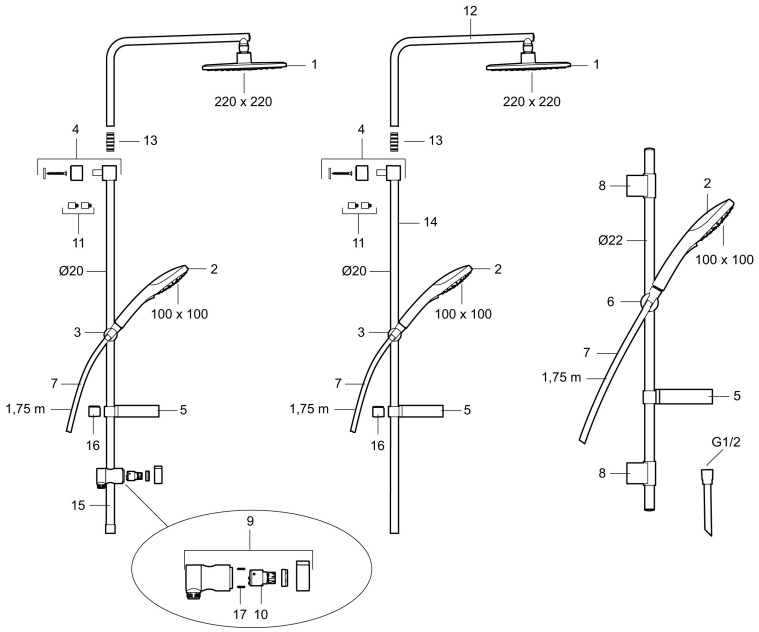

Sparepartlist

NO.	FMM NO.	RSK	DESCRIPTION
1	83890000	8180620	Shower head
2	83753900	8199262	Hand shower
3	94782000	8185652	Slider
4	94712000	8186605	Wall bracket
5	94641000	8185653	Soap dish
6	94781000	8185651	Slider
7	34841750	8181618	Shower hose, chrome
8	83710000	8186586	Wall bracket, 2 pcs
9	58902000	8190734	Diverter, complete
10	59240000	8190735	Cartridge
11	27925000	8180419	Extender, 18 mm, 2 pcs
12	58943000	8217833	Upper bar

NO.	FMM NO.	RSK	DESCRIPTION
13	27930000	8221726	Joint
14	58931000	8217832	Lower bar
15	209549.AE	8180946	Connecting pipe
16	39391000	8221716	Distance ring for Ø18, Ø20 and Ø22 mm pipe
17	38080700	8295337	Stop screw M5x20