9000E shower mixer

An elegantly crafted mixer down to the finest detail. From the gleaming chrome finish to the pressure-balanced thermostat inside – every part is designed to provide you with an energy-efficient and stylish solution. You get a consistent temperature and smooth water flow in all situations, making it a safe and reliable choice for both young and old.

About 9000E
Timeless, classic design with a range of smart, energy-saving features. That's why the 9000E series is the natural choice in so many homes and public spaces. A stylish way to save both water and energy. All mixers in the series are certified and comply with current building regulations.

Article number: 82118100 **RSK:** 8350386 **Flow 3 bar:** 22.9 l/m
Description: Chrome, 150 c/c

Uniqe characteristics

- With shower connection up
- Pressure balanced thermostatic mixer
- With ceramic sealed headwork
- Temperature handle with safety stop at 38°C
- With Eco-function
- Approved non-return valves, EN-Standard EN1717

Backflow protection unit type EB

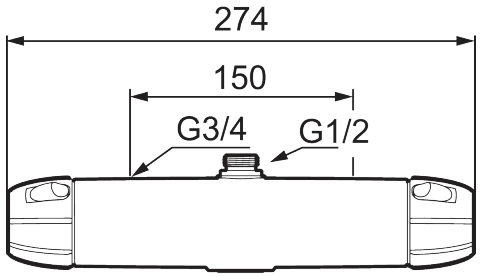

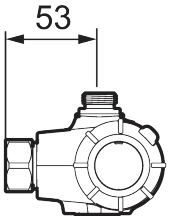

PRODUCT DESCRIPTION

9000E shower mixer

An elegantly crafted mixer down to the finest detail. From the gleaming chrome finish to the pressure-balanced thermostat inside – every part is designed to provide you with an energy-efficient and stylish solution. You get a consistent temperature and smooth water flow in all situations, making it a safe and reliable choice for both young and old.

About 9000E
Timeless, classic design with a range of smart, energy-saving features. That's why the 9000E series is the natural choice in so many homes and public spaces. A stylish way to save both water and energy. All mixers in the series are certified and comply with current building regulations.

Article number: 82118100 **RSK:** 8350386

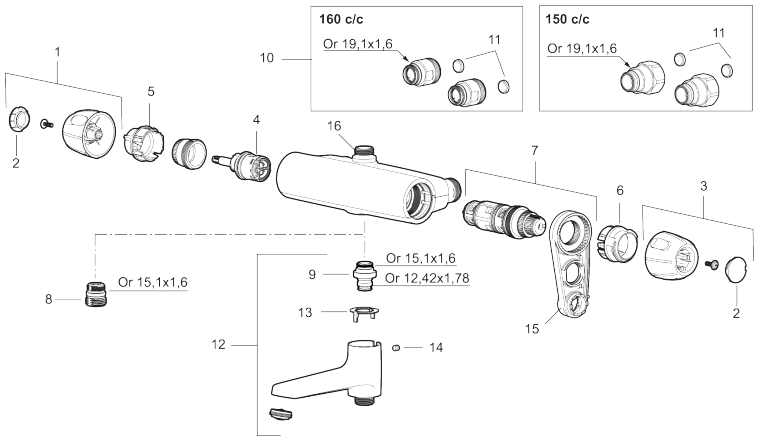

Sparepartlist

NO.	FMM NO.	RSK	DESCRIPTION
1	S600334	8397049	On/off handle, complete, krom
2	S600335	8397050	End cover, black, 2 pcs
3	S600333	8397048	Temperature handle, complete, chrome
4	S600020	8441462	Reversible headwork shower mixer 12 l/min, with service tool
4	S600269	8387232	Reversible headwork shower mixer 12 l/min
4	S600021	8441463	Reversible headwork 22 l/min, with service tool
4	S600270	8387233	Reversible headwork 22 l/min
5	S600086	8439710	Stop ring, for one outlet (down or up)
6	S600087	8439711	Scalding protection ring, max 50°C
6	S600026	8439708	Scalding protection ring, max 42°C
6	S600365	8397058	Scalding protection ring, max 38 °C, black
7	S600084	8439709	Thermostatic cartridge, complete, incl. service tool

NO.	FMM NO.	RSK	DESCRIPTION
7	S600271	8397030	Thermostatic cartridge, complete, without service tool
8	S600088	8439712	Nipple M18x1–G1/2 for shower mixer
9	39754000	8591969	Nipple M18x1 with o-ring for bath mixer
10	59800800	8592005	Inlet connectors, 160 c/c
11	38632006	8590311	Filter
12	S600077	8241000	Swivel spout with integrated diverter, chrome
13	38521000	8295345	Stop ring
14	38086000	8439701	Locking screw
15	S600298	3870203	Service tool
16	39710800	8591967	Nipple M18x1-G1/2 for shower mixer