Adapter M23

Article number: S600284 **RSK:** 8228060
Description: Chrome, M22

- For mounting spout FMM 8586 on FMM 8262
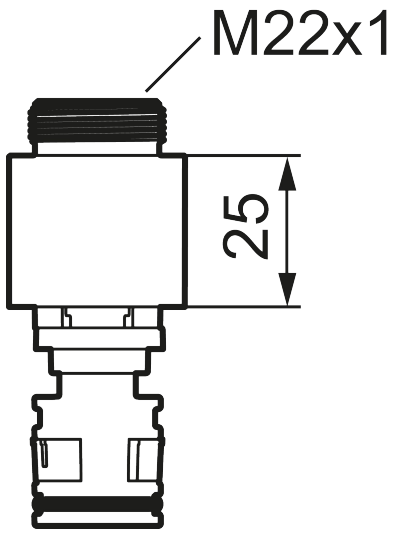
Uniqe characteristics