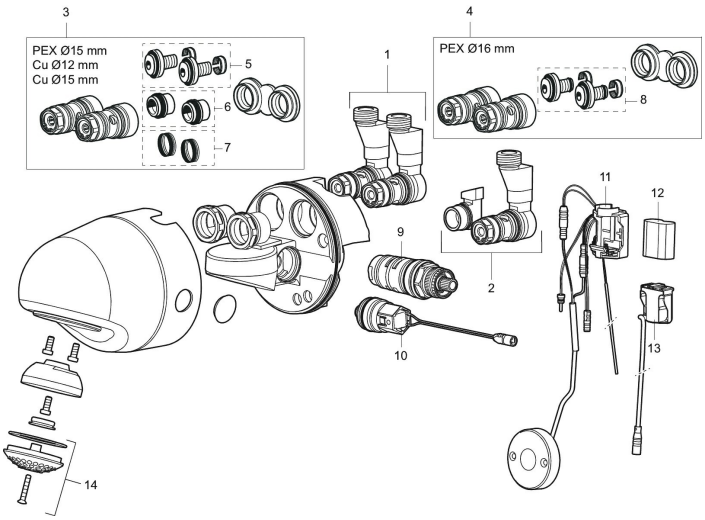

Tronic compact WMS. Produced from 2019.

Article number: 95160000_variant

Uniqe characteristics