eco flow

ecosafe

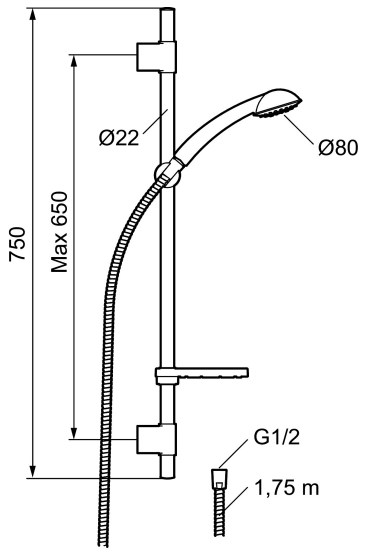

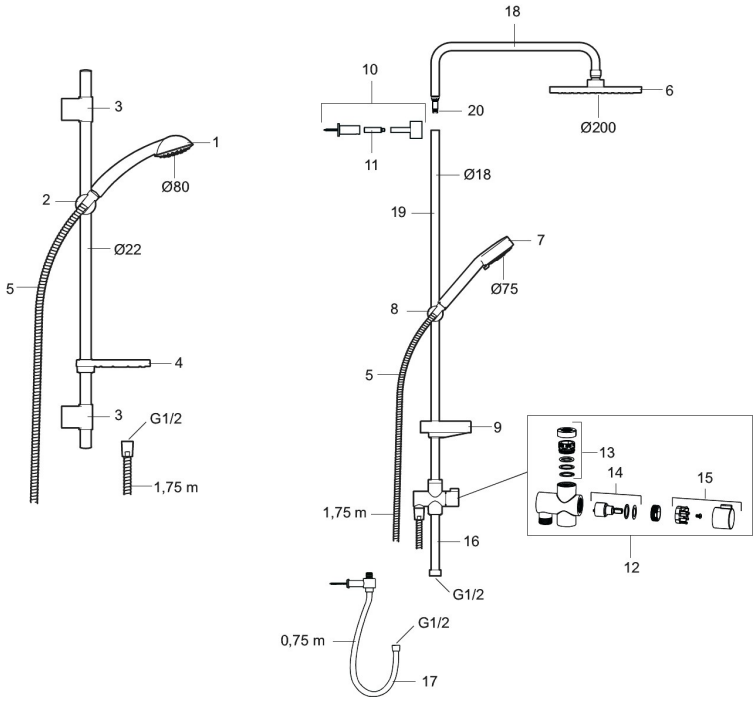
18
10
6
20
Ø200
3
1
11
Ø80
Ø18
2
19
7
Ø22
Ø75
5
8
4
5
3
G1/2
9
13
14
15
1,75 m
1,75 m
16
12
G1/2
G1/2
0,75 m
17