SILJAN bath mixer

In the FM Mattsson Siljan collection, strong focus has been placed on design. Soft, curved shapes are used consistently to create a coordinated look. This, along with our energy-saving functions and well-known high quality, makes them very popular with plumbers.
Also see our FM Mattsson Siljan shower and bath packages – smart all-in-one solutions with an overhead shower or hand shower set.
Article number: 83911500
Description: Chrome, 150c/c

- Shower connection up and down
- For head shower set with G1/2 connection
- With reversible headwork
- Pressure balanced thermostatic mixer
- Swivel spout with built-in diverter
- With ceramic sealed headwork
- Temperature handle with safety stop at 38°C
- With Eco-function
- Approved non-return valves, EN-Standard EN1717

Uniqe characteristics

Assessed

Backflow protection unit type EB

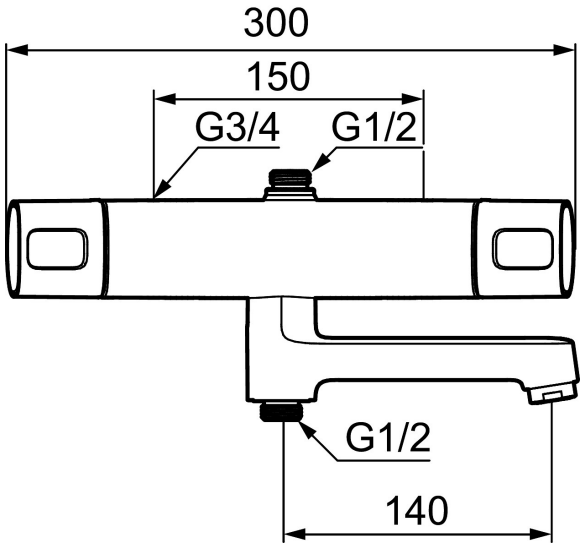

PRODUCT DESCRIPTION

SILJAN bath mixer

In the FM Mattsson Siljan collection, strong focus has been placed on design. Soft, curved shapes are used consistently to create a coordinated look. This, along with our energy-saving functions and well-known high quality, makes them very popular with plumbers.
Also see our FM Mattsson Siljan shower and bath packages – smart all-in-one solutions with an overhead shower or hand shower set.
Article number: 83911500

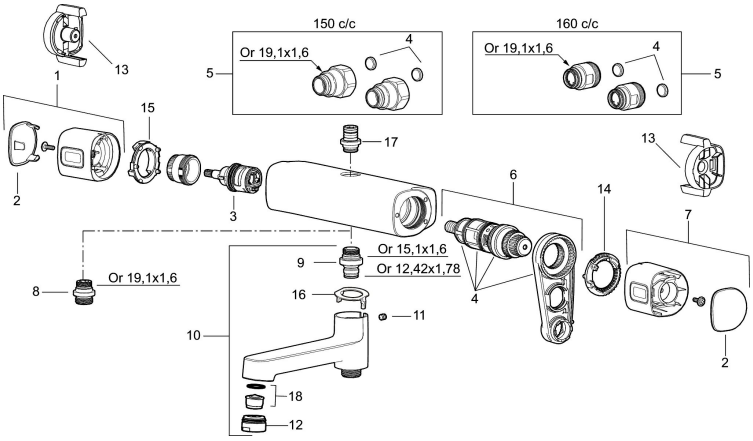

Sparepartlist

NO.	FMM NO.	RSK	DESCRIPTION
1	35480009	8592029	On/off handle, complete
2	39031500	8592052	End cover
3	35980009	8585850	Ceramic on/off headwork, reversible
4	38680009	8591701	Filter kit incl. o-rings and service tool
5	59800800	8592005	Inlet connectors, 160 c/c
5	59810800	8592006	Inlet connectors 150 c/c (left-handed thread)
6	38601009	8591609	Thermostatic cartridge, complete, incl. service tool
7	35480109	8592033	Temperature handle, complete
8	39710800	8591967	Nipple M18x1-G1/2 for shower mixer
9	39754000	8591969	Nipple M18x1 with o-ring for bath mixer
10	83990000	8154079	Swivel spout with integrated diverter
11	38086000	8439701	Locking screw
12	29142400	8281526	Housing M24 ext., 13 mm
13	35976209	8592039	Care-handle, black, 2 pcs
14	38523000	8592058	Scalding protection ring
15	38531000	8592059	Stop ring, standard

NO.	FMM NO.	RSK	DESCRIPTION
15	38531040	8592060	Stop ring, reversible
16	38521000	8295345	Stop ring
17	39716000		Nipple M18x1
18	29102650	8281547	Aerator insert, 20–24 l/min at 300 kPa