Single wall bracket for Cu-pipe

Article number: 17051540
Description: Stainless steel, G1/2 D: Ø12

- Swivel nipple with radial adjustment
- With wall seal
- Wall channel for the connection between concealed and visible piping, the pipe joint is placed outside the wall
- Screw holes: Ø6, countersink, c/c 80 mm
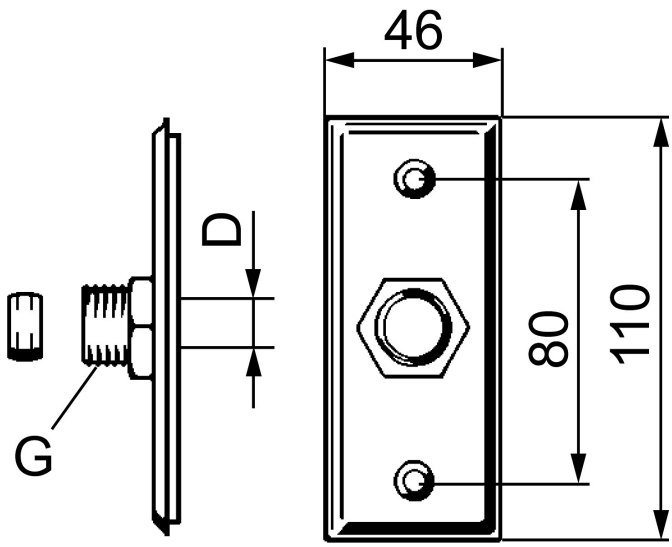
Uniqe characteristics